HINO 500 1324 FC

CHASSIS +

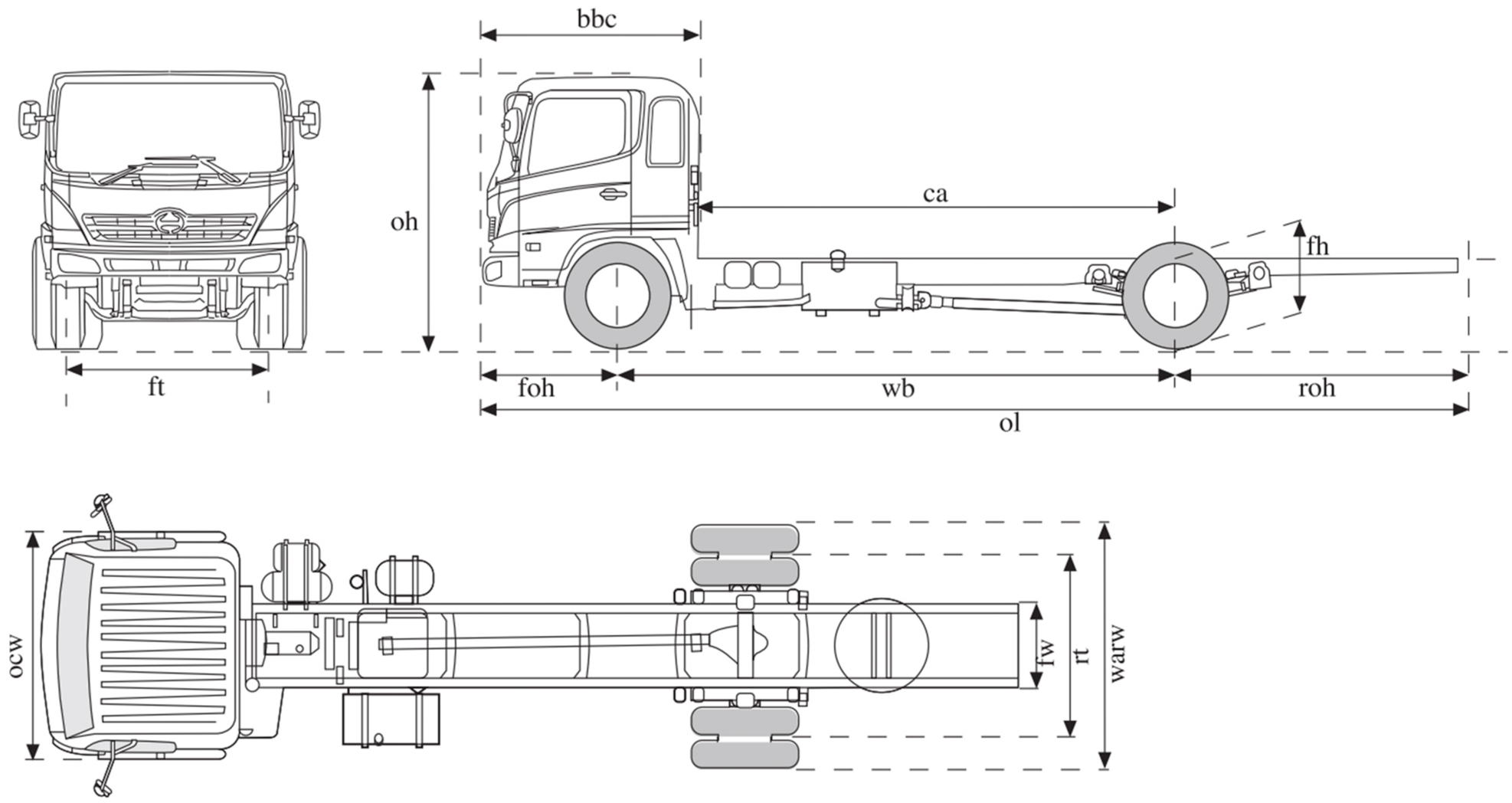

SPECIFICATIONS	DIMENSIONS (mm)
BBC - Rear Structure	2060
CA - Cab to Axle	4705
CH - Cab Height	2615
CW - Cab Width (excl. mirrors)	2355
FH - Frame Height @ Rear Axle	1015
FOH - Front Overhang	1235
FT - Front Track	1885
FW - Frame Width (Outside)	870
FWH - Fifth Wheel Height	N/A
Max. homologated body width	2600
Maximum Body Length	7900
Suggested Body Length	6500
Minimum Ground Clearance	240
OL - Overall Length	9460
OVH - Overall Vehicle Height	2615
ROH - Rear Overhang	2550
RT - Rear Track	1820
WARW - Width Across Rear Wheels	2400
WB - Wheel Base (FAS+WB+RAS)	5530